Diritti riservati All rights reserved

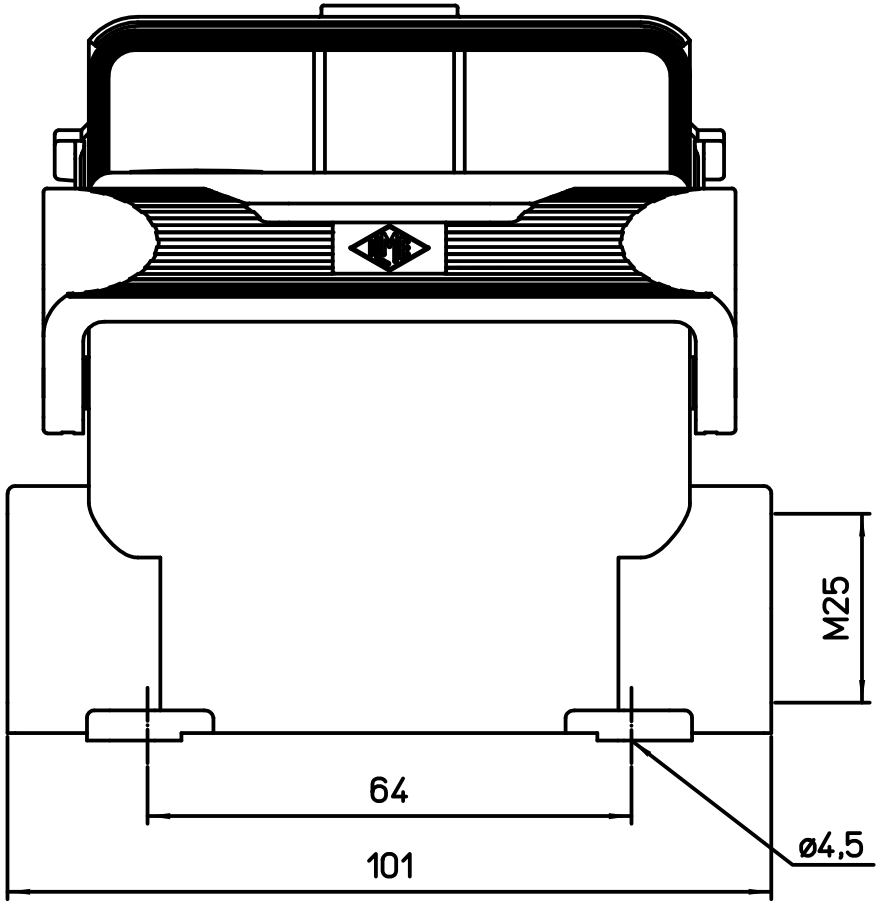

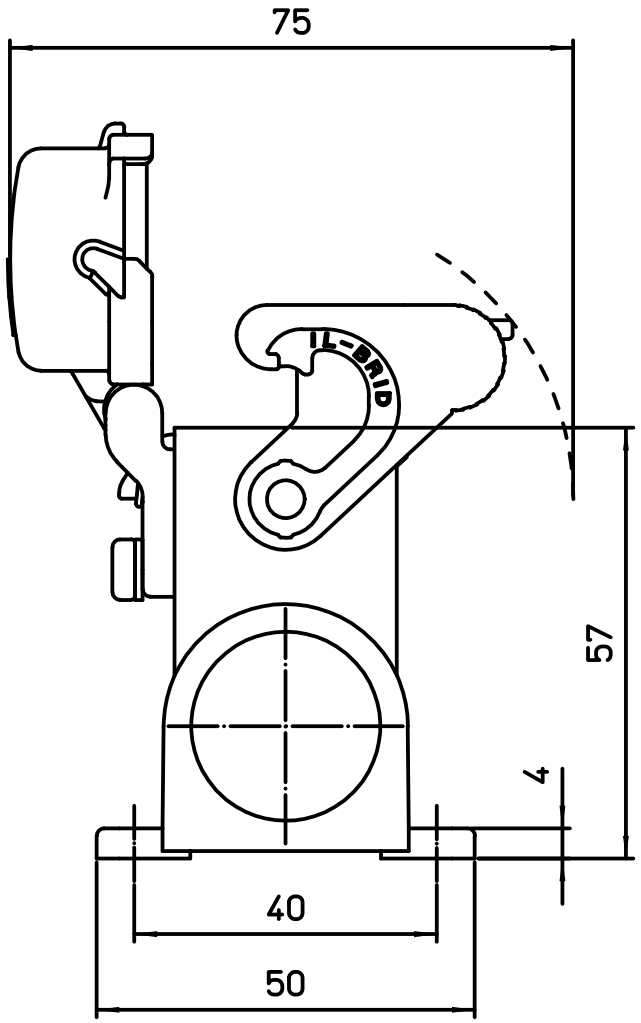

dimensions in mm	MZAP 25LSP25	Scale
Date 21/03/19	Surface mounting housings with 1L and cover, M25 - SIMPLEX	1:1
Sign. Pitasi		